Design and Development of a Portable Bio Impedance Based Device for Foot Analysis

Shreenandan Sahu [1] | Guide: Prof. Boby George [2]

[1] Department of Applied Mechanics & Biomedical Engineering | [2] Department of Electrical Engineering | Indian Institute Of Technology Madras

INTRODUCTION

Diabetic foot complications such as ischemia, neuropathy, and tissue degeneration ***alter the electrical properties of biological tissue***. Early identification of localized tissue changes is important for ***preventive monitoring and clinical intervention***.

Bioimpedance analysis is a ***non-invasive technique*** that characterizes tissue properties through frequency-dependent electrical impedance measurements. Since different regions of the foot experience varying pressure distribution and vascular conditions, localized multi-point impedance acquisition becomes important for ***tissue characterization***.

This work presents the ***design and development of a portable multi-point bioimpedance measurement system for localized foot tissue analysis*** using frequency sweep-based impedance characterization.

OBJECTIVE

- Portable Bioimpedance System
- Multi-Point Foot Interface
- Frequency Sweep Measurement
- Control & Visualization User Interface
- Spatial Impedance Analysis

WORKING PRINCIPLE

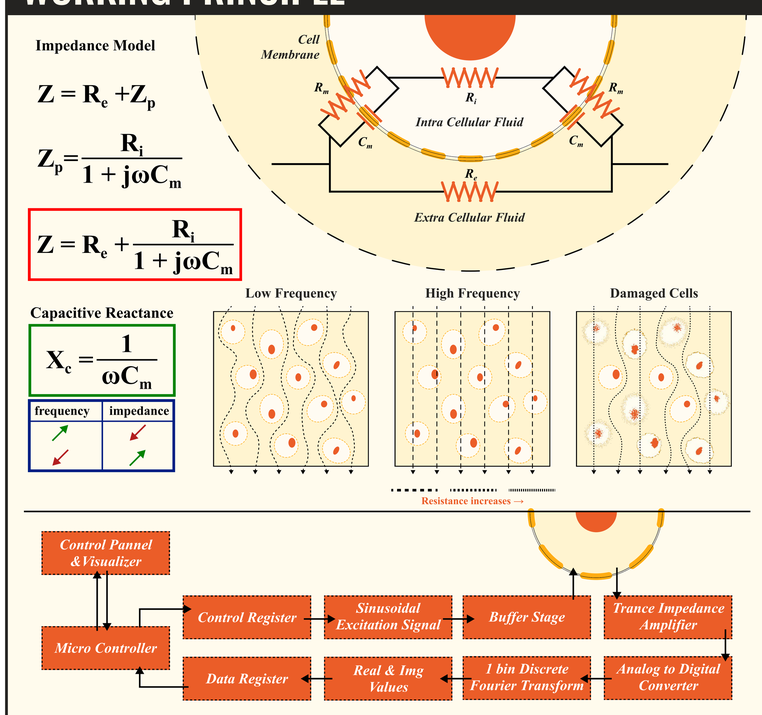

Bioimpedance depends on ***extracellular resistance (R_e), intracellular resistance (R_i), and membrane capacitance (C_m)***. At low frequencies, the membrane capacitance offers high reactance, restricting current mainly to extracellular pathways and increasing impedance. At higher frequencies, capacitive reactance decreases, allowing current to penetrate cells and flow through intracellular regions, reducing overall impedance. ***Tissue damage alters membrane integrity and reduces capacitive behavior,*** resulting in easier current penetration and ***changes in the frequency-dependent impedance response***, which can indicate structural or physiological abnormalities.

RESULTS (HARDWARE / SOFTWARE / IMPEDANCE PLOT)

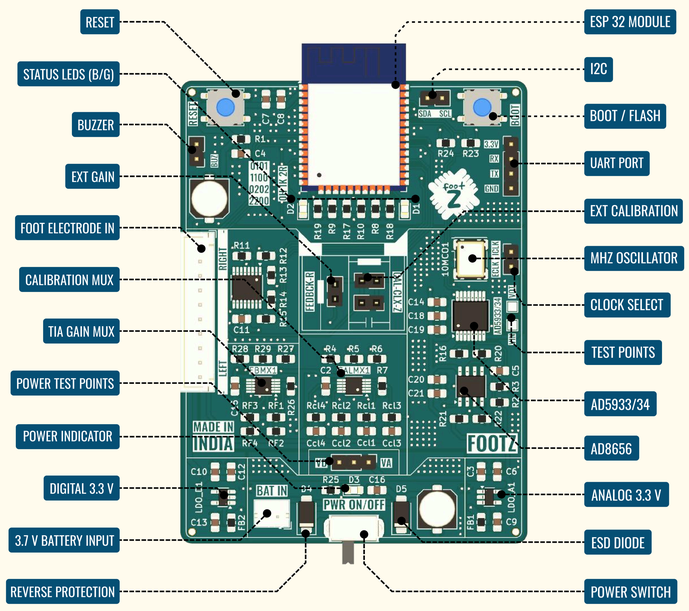

FOOTZ- MAIN CIRCUIT PARTS

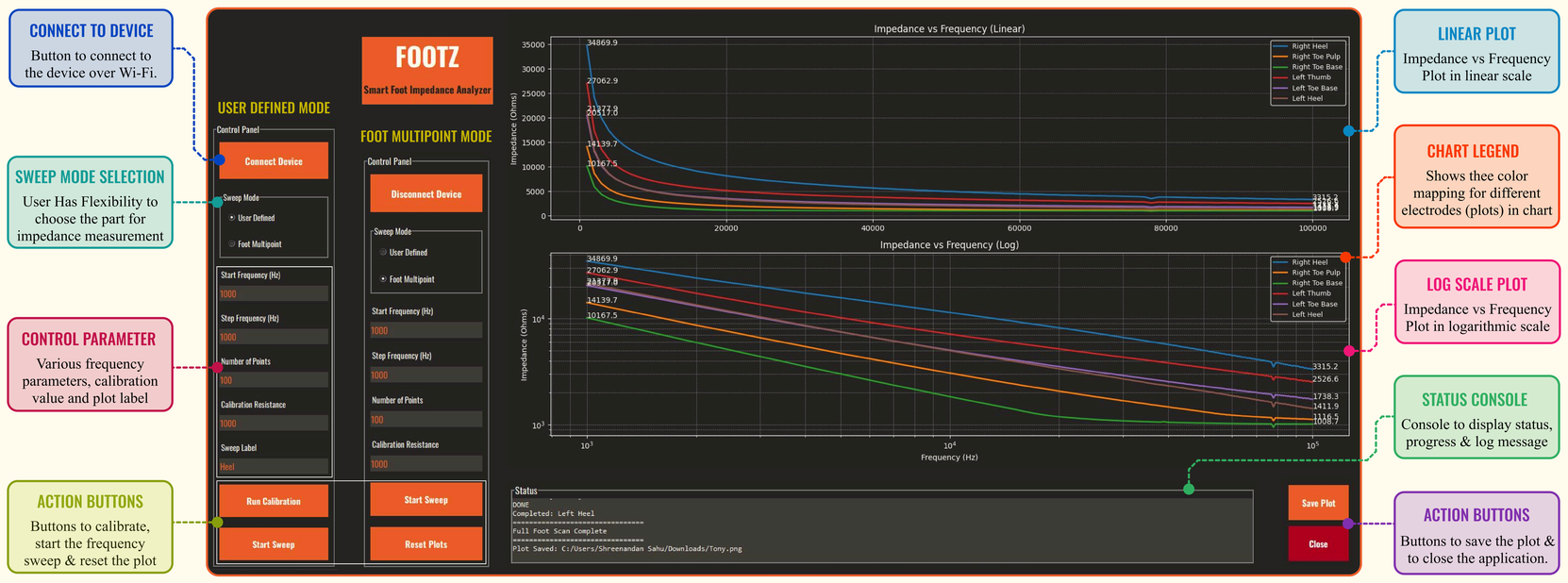

FOOTZ- CONTROL AND VISUALISATION SOFTWARE

FOOTZ- ELECTRODE PAD DESIGNED & FABRICATED

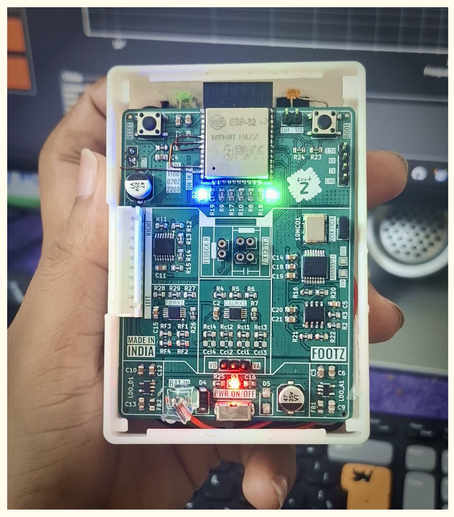

FINAL WORKING PROTOTYPE DEVELOPED

COMPLETE HARDWARE SETUP

FEATURES OF THE DEVELOPED SYSTEM

- **MULTI POINT** — Simultaneous impedance analysis across multiple foot regions
- **FREQUENCY SWEEP** — Wideband bioimpedance spectroscopy from 1 kHz–100 kHz
- **EMBEDDED HARDWARE** — Custom ESP32 and AD5934 based embedded acquisition system
- **DATA LOGGING** — Real-time measurement storage and export functionality
- **COMPACT PORTABLE** — Lightweight and portable foot bioimpedance platform
- **ELECTRODE SWITCHING** — Automated multi-electrode scanning using analog multiplexers
- **CUSTOM FOOT PAD** — Ergonomic electrode-integrated foot interface design
- **REAL TIME DATA** — Live impedance visualization and analysis interface
- **WIRELESS OPERATION** — WiFi-enabled communication without external routers
- **AUTO CALIBRATION** — Integrated calibration framework for accurate measurements

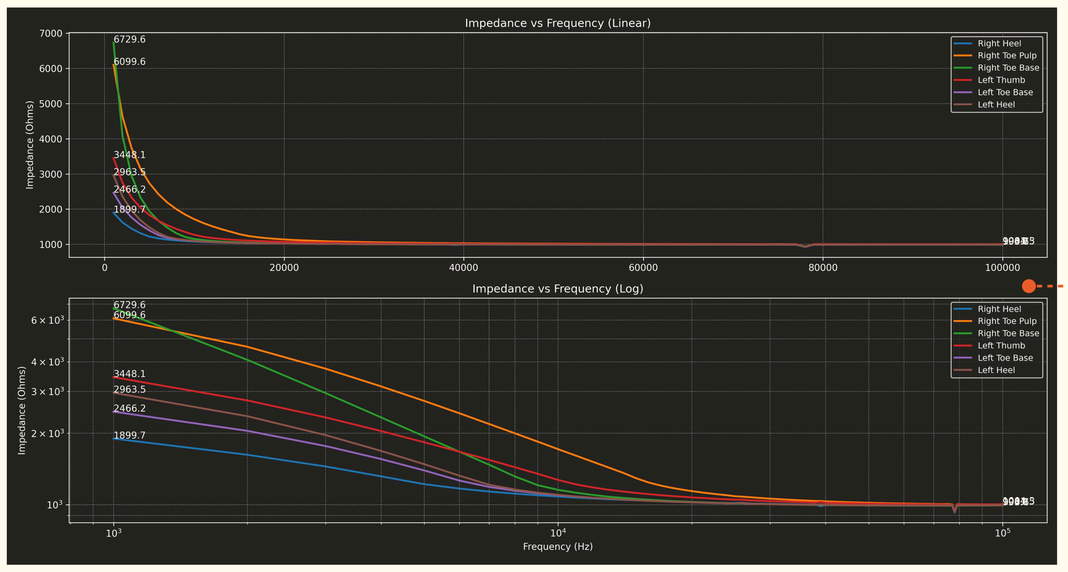

DIFFERENT PRESSURE POINTS ON BOTH FOOT

DIFFERENT SKIN TYPES OF A PERSON

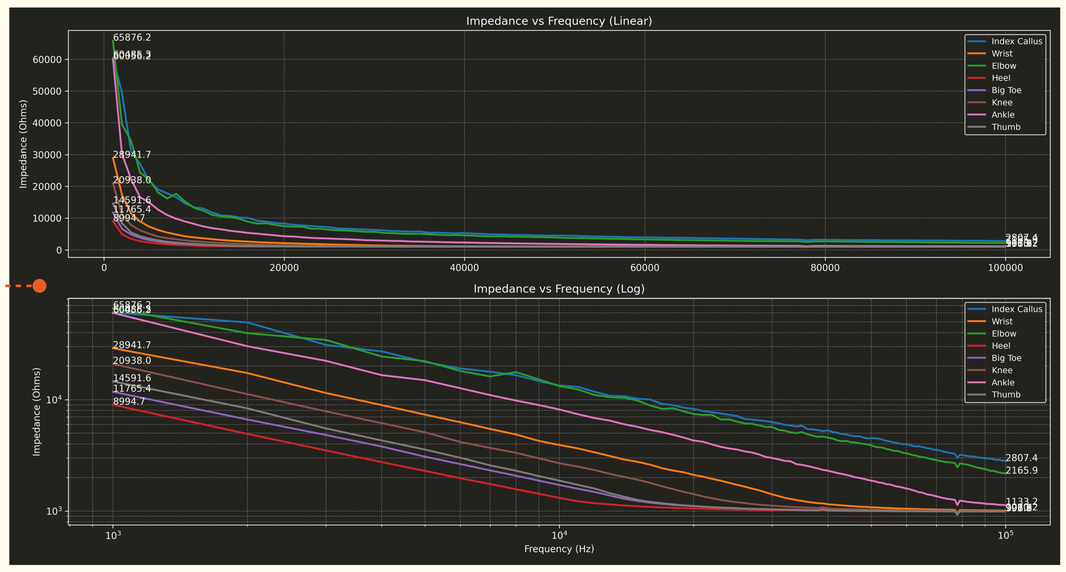

CONCLUSION

A ***portable multi-point bioimpedance measurement system*** for localized foot tissue analysis ***was successfully designed and developed***. The integrated system combines embedded hardware, frequency sweep-based impedance acquisition, electrode multiplexing, and real-time software visualization into a compact platform. Experimental measurements ***demonstrated clear frequency-dependent impedance behavior*** and spatial variation across different tissue regions, ***validating the feasibility of the proposed system for localized bioimpedance characterization*** and future diabetic foot monitoring applications. (*Multi point calibration is yet to be done for accurate readings*)

COMPLETE IMPEDANCE ANALYZER SETUP

REFERENCES

- G. Chand, A. K. Mishra, S. Kumar, and A. Agarwal, "Diabetic Foot," Clinical Queries: Nephrology, vol. 1, no. 2, pp. 144–150, 2012.
- C. Tronstad et al., "Diabetic Foot Assessment using Skin Impedance in a Custom-Made Bioimpedance Spectroscopy Device," Sensors, vol. 23, no. 2, 2023.
- Analog Devices, "AD5934: High Precision Impedance Converter System Solution Datasheet," Analog Devices Inc., Wilmington, MA, USA, 2024.
- Espressif Systems, "ESP32-WROOM-32 Datasheet," Espressif Systems, Shanghai, China, 2023.

KNOW MORE

footz-iitm.netlify.app

(Demo / Images / Report)

ACKNOWLEDGEMENT

Dedicated to the **Almighty**, **Prof. Boby George**, my **parents**, and **lab mates** for their constant guidance, support, and encouragement throughout this project.